STRUKTUR CD INTERAKTIF

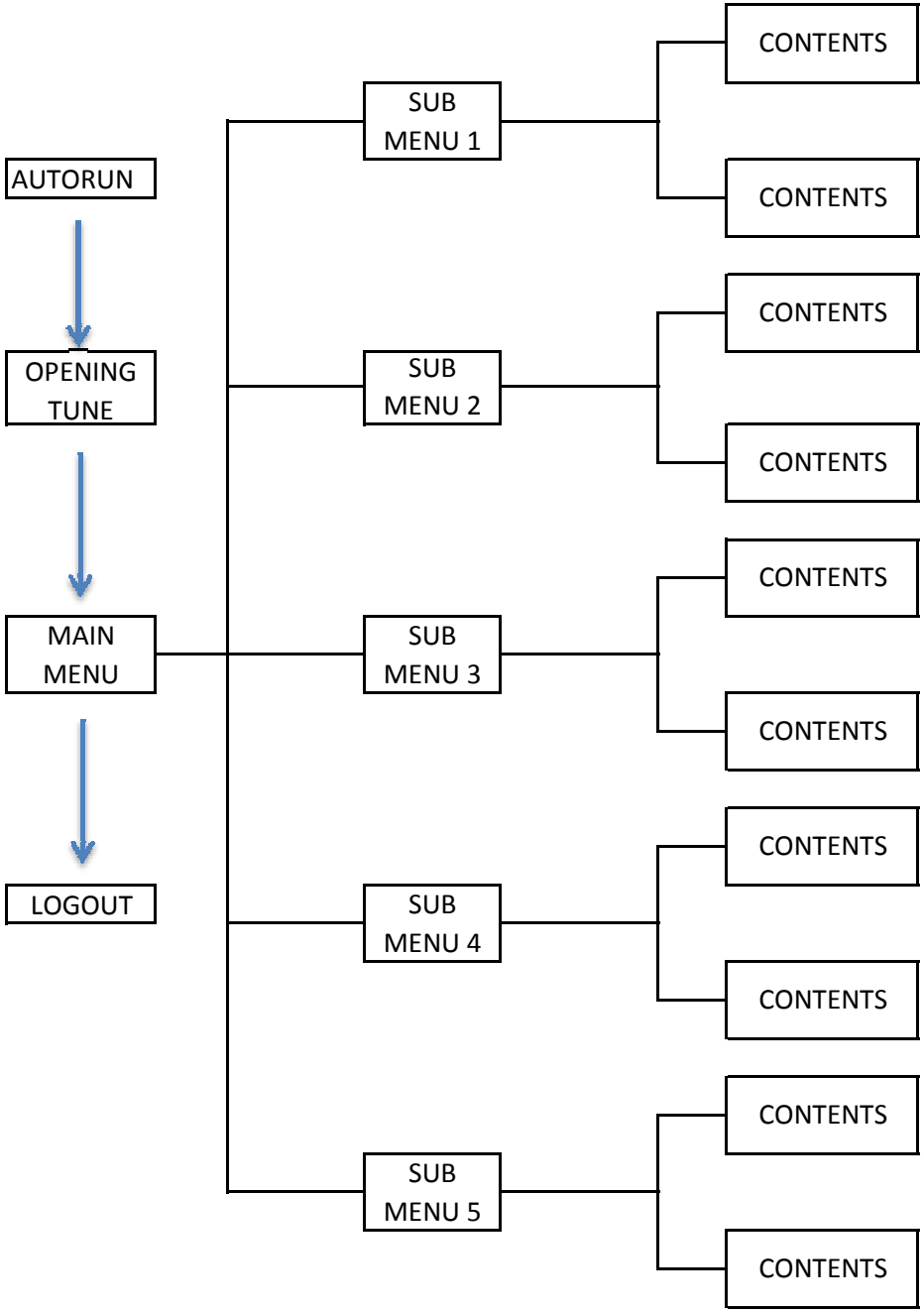

REMARK

Page Description	Page Composition
Main menu	explained
Sub menu 1	explained
Sub menu 2	explained
Sub menu 3	explained
Sub menu 4	explained
Sub menu 5	explained
Content	explained
etc	